Key Issues of Technical Interoperability Solutions in eHealth and the RIDE Project

Asuman Dogac[1], Tuncay Namli[1], Alper Okcan[1], Gokce Laleci[1], Yildiray Kabak[1] and Marco Eichelberg[2]
[1]Software R&D Center, Dept. of Computer Eng., Middle East Technical University
06531, Ankara, Turkey
[2]OFFIS - Oldenburger F&E-Institut für Informatik-Werkzeuge und -Systeme
Escherweg 2, D-26121 Oldenburg, Germany

ABSTRACT

One of the key problems in healthcare informatics is the lack of interoperability among different healthcare information systems. Interoperability can be investigated in different categories in the eHealth domain, such as the interoperability of the messages exchanged between healthcare applications, interoperability of Electronic Healthcare Records (EHRs), interoperability of patient identifiers, coding terms, clinical guidelines and healthcare business processes. Furthermore, all these categories can be investigated in two major layers: syntactic interoperability layer and the semantic interoperability layer. Syntactic interoperability (which we term as messaging layer), involves the ability of two or more systems to exchange information. Syntactic interoperability involves several layers: network and transport layer (such as Internet), application protocol layer (such as HTTP or email), messaging protocol and message format layer (such as ebXML messaging or SOAP), and the sequencing of the messages.

Syntactic interoperability guarantees the message to be delivered but does not guarantee that the content of the message will be machine processable at the receiving end. To guarantee message content interoperability, either the message content should conform to a single machine processable standard or semantic interoperability must be provided. Semantic interoperability is the ability for information shared by systems to be understood at the level of formally defined domain concepts.

This paper describes the concepts involved in eHealth interoperability; briefly assesses the current state in some of the countries in the world and discusses the technical issues to be addressed for achieving interoperability and concludes by providing links to the results achieved in the IST 027065 RIDE Project.

I. THE INTEROPERABILITY PROBLEM IN THE HEALTHCARE DOMAIN

Interoperability is the ability of different information technology systems and software applications to communicate, to exchange data accurately, effectively, and consistently, and to use the information that has been exchanged. Making healthcare information systems interoperable will reduce cost of health care and will contribute to more effective and efficient patient care.

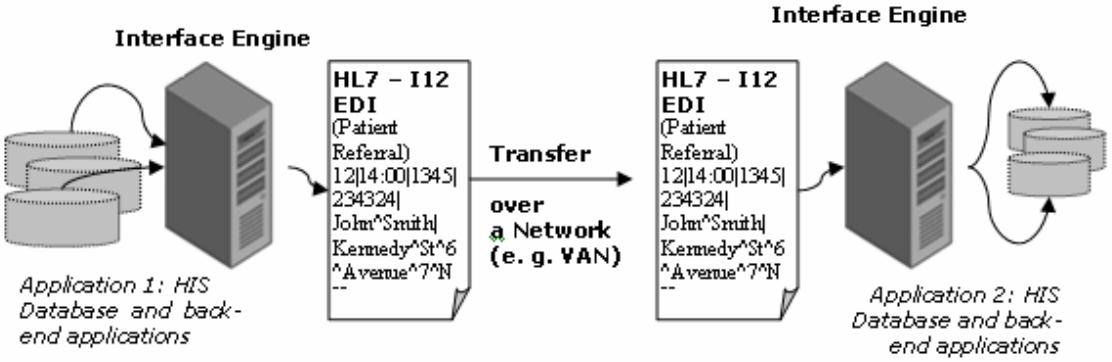

Figure 1. Message exchange between heterogeneous applications

The healthcare interoperability problem can be investigated in the following categories:

1. Interoperability of the healthcare messages exchanged: To be able to exchange information among heterogeneous healthcare information systems, messaging interfaces (also called interface engines) are used. Typically, a messaging interface gathers data from the back-end application systems, encodes the data into a message, and transmits the data over a network such as a Value Added Network (VAN) to another application. On the receiver side, the received messages are decoded, processed and the data which have been received are fed into the receiver's back-end systems to be stored and processed as shown in Figure 1.
   When proprietary formats are used in messaging, the number of the interfaces to be developed increases drastically. For example, if there are four applications that need to exchange messages, each of them needs to develop three interfaces. In fact, the total number of interfaces to be developed is $n*(n-1)/2$, i. e. $O(n^2)$, for n applications. To overcome this problem, message standards are preferred in which case an application can, in principle, talk to any other application conforming to the same message standard by using the same message interface.
   Currently, the Health Level 7 (HL7) Version 2 Messaging Standard [HL7, HL7v2.5] is the most widely implemented message interface standard in the healthcare domain. However, being HL7 Version 2 compliant does not imply direct interoperability between healthcare systems. This stems from the fact that Version 2 messages have no explicit information model, rather vague definitions for many data fields and contain many optional fields. This optionality provides great flexibility, but necessitates detailed bilateral agreements among the healthcare systems to achieve interoperability. To remedy this problem, HL7 Version 3 [HL7V3] is developed, which is based on an object-oriented data model, called Reference Information Model (RIM) [HL7RIM]. It should be noted that there is an interoperability problem between HL7 v2.x and HL7 v3 messages – there is no well-defined mapping between HL7 v2.x and v3 messages.
2. Interoperability of electronic healthcare records (EHR): The Electronic Healthcare Record (EHR) of a patient can be defined as digitally stored health care information about individual's lifetime with the purpose of supporting continuity of care, education and research, and ensuring confidentiality at all times [Iakovidis 1998]. A patient's healthcare information may be spread out over a number of different institutes which do not interoperate. In order to provide continuity of care, clinicians should be able to capture the complete clinical history of a patient. A number of standardization efforts are progressing to provide the interoperability of electronic healthcare records such as CEN/TC 251 EHRcom [EHRcom 2004], openEHR [OpenEHR] and HL7 Clinical Document Architecture (CDA) [HL7CDA]. However, an exchange of well-structured and machine processable electronic healthcare records has not been achieved yet in practice. Also, given the large number of standards for this purpose, conforming to a single standard does not solve the interoperability problem.
3. There are several other aspects of healthcare domain in need of interoperability such as patient identifiers, coding terms, clinical guidelines and healthcare business processes.

II. LAYERS OF SYNTACTIC INTEROPERABILITY IN eHEALTH

A prerequisite for interoperability is the ability to communicate: that is, the bits running on the wires. In transferring healthcare messages between application systems, network and transport protocols are needed, such as Internet. In fact, today, TCP/IP (Internet) is the de-facto on-line communication standard. On top of this, an application protocol standard is needed such as HTTP or SMTP (email). On top of this layer, standard messaging protocol layer is necessary such as SOAP [SOAP] or ebXML messaging [ebMS]. The sequencing of the messages also needs to be standardized. For example, in HL7, when "I05 RQC Request Clinical Information" message is sent, the expected return message is "I05 RCI Return Clinical Information". There are also different types of messages: each message is either a message with the intent of action or an acknowledgment message indicating the successful transmission of a message or an error message indicating an error situation. Finally, for the message content to be processed correctly

by the receiving application, the message content structure and the data items in the message must be standardized, for example as proposed by HL7 Version 3.

As an example of different layers of interoperability in eHealth, consider for example, the IHE Patient Identifier Cross-referencing (PIX) Profile [IHE TF]. In IHE PIX Profile, the network and transport protocol can be Internet; the messaging protocol is EDI and the content in Patient Identity feed message is defined through HL7 ADT messages A01, A04, A05, A08 or A40.

III. SEMANTIC INTEROPERABILITY IN eHEALTH

Semantics, which is the metadata describing data, is described through ontologies. An ontology can be defined as “a formal, explicit specification of a shared conceptualization” [Gruber 1993]. Formal means that the meaning specification is given in a machine processable language, called the ontology language. An explicit specification means that the concepts and the relationships in the abstract model are given explicit names and definitions. An important feature of ontology languages is that they provide for automated inference to derive new, implicit information from these explicit specifications. Shared means that an ontology describes consensual knowledge, that is, it describes meaning which has been accepted by a group, not by a single individual; in other words, it provides a common vocabulary for those who have agreed to use it. An ontology together with a set of concrete instances constitute a knowledge base. Currently, Web Ontology Language (OWL) [OWL] is a widely accepted ontology language.

A common usage of the term “semantic interoperability in eHealth” can be found in [CEN/ISSS]:

“*Semantic interoperability implies that the structure of the 'documents' is interpretable, and that their content is understandable. Making this content understandable sometimes requires that the keys for its correct and safe interpretation, such as the terminological systems used, are identified and easily available*.”

An overview and assessment of the currently available state-of-the-art ontologies and ontology-like artifacts (controlled vocabularies) in healthcare are given in [Ceusters 2006]. For example, SNOMED CT which is a Description Logics supported, concept based ontology, contains over 366,000 healthcare concepts organized into hierarchies, with approximately 1.46 million semantic relationships between them, and more than 993,420 terms.

Another important use of semantic interoperability in the healthcare domain is the integration of data from heterogeneous sources through semantic mediation. Semantic mediation can be used to convert healthcare messages defined in one standard format into another as realized with the scope of the Artemis project [Artemis, Dogac 2006, Bicer 2005a]. Furthermore, an approach to archetype based semantic interoperability of EHR standards, as realized within the scope of the Artemis project, is described in [Bicer 2005b].

IV. INTEROPERABILITY THROUGH ELECTRONIC HEALTHCARE RECORDS (EHRs)

Considerable clinical information about a patient is passed around through the messages exchanged among healthcare applications. What differentiates an Electronic Healthcare Record (EHR) from the patient data contained in such messages is that, an EHR as defined in [Iakovidis 1998] is “digitally stored health care information about an individual's lifetime with the purpose of supporting continuity of care, education and research, and ensuring confidentiality at all times". In other words, EHR is the collection of relevant clinical data about an individual's lifetime usually in a document structure.

To address the EHR interoperability problem, there are several standards currently under development such as the Health Level 7 (HL7) Clinical Document Architecture (CDA) [HL7CDA], CEN EN 13606 EHRcom [EHRcom 2004] and openEHR [OpenEHR]. A detailed survey and analysis of EHR standards are given in [Eichelberg 2005].

These standards aim to structure and markup the clinical content for the purpose of exchange. There is also an industry initiative called Integrating the Healthcare Enterprise (IHE) [IHE] which specified the Cross-Enterprise Document Sharing (XDS) integration profile [IHE TF] for this purpose. The basic idea of IHE XDS is to store healthcare documents in an ebXML registry/repository [ebXMLRR] architecture to facilitate their sharing.

It should be noted that the EHR interoperability standards address the interoperability layers described in Section II differently. In the following, we first briefly introduce some of the prominent EHR standards and then describe how each EHR standard addresses the technical interoperability layers: messaging layer (what standard network and transport protocols are used in transferring EHRs over the network?) and content interoperability layer (What is the content standard?).

The GEHR/openEHR Initiative

The most noteworthy concept introduced by GEHR/openEHR is the “archetype" concept [Beale 2002]. This approach uses a two-level methodology to model the EHR structure. In the first level, a generic reference model that is specific to the healthcare domain but still very general is developed [OpenEHR03, OpenEHR05]. This model typically contains only a few classes (e.g. role, act, entity, participation) and must be stable over time. In the second level, healthcare and application specific concepts such as blood pressure, lab results etc. are modeled as archetypes, that is, constraint rules that specialize the generic data structures that can be implemented using the reference model. As an example, a constraint may restrict a generic “Observation" class, for example, to “Blood Pressure" archetype.

An archetype definition basically consists of three parts: descriptive data, constraint rules and ontological definitions. The descriptive data contains a unique identifier for the archetype, a machine-readable code describing the clinical concept modeled by the archetype and various metadata such as author, version, and purpose. The constraint rules are the core of the archetype and define restrictions on the valid structure, cardinality and content of EHR record component instances complying to the archetype. The ontological part defines the controlled vocabulary (that is, the machine readable codes) that can be used in specific places in instances of the archetype. It may contain language translations of code meanings and bindings from the local code values used within the archetype to external vocabularies such as SNOMED [SNOMED CT] or LOINC [LOINC]. It may also define additional constraints on the relationship between coded entries in the archetype based on the code value.

CEN/TC 251 and ENV/EN 13606 EHRcom

The CEN Pre-standard ENV 13606:2000 “Electronic Healthcare Record Communication" [CEN13606.2000] is a message-based standard for the exchange of electronic healthcare records. It also defines a list of machine-readable domain terms that can be used to structure EHR content, a method of specifying “distribution rules", that is, rules under which certain EHR content may be shared with other systems and, finally, request and response messages that allow systems to exchange subsets of an EHR.

EN 13606, called EHRcom, will be a five-part standard consisting of:

- The Reference Model,
- Archetype Interchange Specification,
- Reference Archetypes and Term Lists,
- Security Features, and
- Exchange Models (communication protocol).

HL7 Clinical Document Architecture (CDA)

CDA [HL7CDA] is organized into three levels where each level iteratively adds more markup to clinical documents, although the clinical content remains constant at all levels. “Level One" focuses on the content of narrative documents. It consists of two parts, the CDA Header and the CDA Body, which are based on the HL7 data types. The document header is derived from RIM and unambiguously defines each entry in the document. The body contains the clinical document content, and can be either an unstructured text, or can be comprised of nested containers such as sections, paragraphs, lists, and tables through structured markup. Hence there is no semantics in Level One body; it offers interoperability only for human-readable content. In fact,

CDA Level One describes a kind of HTML document with a standardized header that contains additional information on the document.

Level Two CDA models the fine-grained observations and instructions within each heading through a set of RIM Act classes. With Level Two, it is possible to constrain both structure and content of a document by means of a template and thereby increase interoperability since the receiver “knows what to expect". However, a completely structured document where the semantics of each information entity is specified by a unique code will only be possible with “Level Three" providing for machine processing.

IHE Cross-Enterprise Document Sharing (XDS)

The basic idea of IHE XDS [IHE TF] is to store healthcare documents in an ebXML registry/repository [ebXMLRR] to facilitate their sharing. IHE XDS is not concerned with document content; it only specifies metadata to facilitate the discovery of documents.

In the IHE XDS integration profile, a group of healthcare enterprises that agree to work together for clinical document sharing is called the “Clinical Affinity Domain". Such institutes agree on a common set of policies such as how the patients are identified, the consent is obtained, the access is controlled, and the common set of coding terms to represent the metadata of the documents.

As already mentioned, IHE XDS handles healthcare documents in a content neutral way, that is, a document may include any type of information in any standard format such as simple text, formatted text (e.g., HL7 CDA Release One), images (e.g., DICOM [DICOM]) or structured and vocabulary coded clinical information (e.g., CDA Release Two, CEN ENV 13606 or DICOM SR). Given this, to ensure the interoperability between the document sources and the document consumers, the clinical affinity domains also agree on the document format, the structure and the content.

IHE Cross-Enterprise Sharing of Medical Summaries (XDS-MS)

Cross-Enterprise Sharing of Medical Summaries (XDS-MS) is a mechanism to automate sharing of Medical Summaries between care providers. The main characteristics of XDS-MS are as follows:

- XDS-MS Profile uses the Actors and Transactions of IHE XDS; only the Document types used in XDS-MS are more specific Medical Summaries.
- Two types of Medical Summary content are currently specified: one for episodic care, the other for collaborative care.
- A third type of Medical Summary for permanent care is yet to be defined by IHE.
- XDS-MS specifies content of Medical summaries by building on and further constraining the HL7 Clinical Document Architecture (CDA) standard and Care Record Summary (CRS) CDA implementation guides.
- Document Sources provide an XML style sheet to render the content of the Medical Summary document.
- Medical summaries are shared within predefined domains (called XDS Affinity Domains) by storing the medical summaries in Registry/Repositories. Note however that IHE also plans the federated XDS Affinity domains; therefore the exchange of medical documents will not be restricted to XDS Affinity Domains in the near future.
- Registry/Repository architectures facilitate the discovery of the Medical Summaries in an XDS Affinity Domain.

IHE Retrieve Information for Display (RID)

Retrieve Information for Display (RID) [IHE TF] provides a simple and rapid read-only access to patient-centric clinical information that is located outside the user's current application. It supports access to existing persistent documents in well-known presentation formats such as CDA Level

One, PDF and JPEG. It also provides access to specific key patient-centric information such as allergies, current medications, and summary of reports for presentation to a clinician.

IHE defined RID as a Web service by providing its WSDL (Web Service Description Language) [WSDL] description with a binding to HTTP GET.

V. OTHER MUST ISSUES TO BE ADDRESSED IN EHR INTEROPERABILITY

For EHR interoperability, the further technical issues that must also be addressed include:

- **Mapping the patient identifiers among different healthcare applications:** A key issue in accessing the EHR of a patient is his/her patient identifier. Yet different healthcare enterprises or even different departments in a healthcare institute may be using different identifiers for the same patient. Some of the possible mechanisms are as follows:
    - A central database containing all person identification numbers linked to demographic data
    - Smart card containing person identification numbers and demographic data
    - Master Patient Indexes mapping patient identifiers in different systems to each other.
- **Authenticating the users across the enterprises:** The users must be authenticated not only in their own domain but also across the enterprises.
- **Guaranteeing that all the computers involved have consistent time:** For distributed applications to work correctly it is essential that the system clocks and time stamps of the many computers in the network are well synchronized.
- **Authenticating Nodes and Obtaining Audit Trail:** Limiting access control to authorized users is not enough; it is necessary to limit network access between nodes and to limit access to each node in a healthcare setting. Put it differently, an entire host must be secured, not just individual users. Furthermore, audit trail is essential. It is necessary to allow a security officer in a healthcare institution to audit activities to detect improper creation, access, modification and deletion of Protected Health Information (PHI). The audit trail must contain information to answer the following questions:
    - For some user: which patients' PHI was accessed?
    - For some patient PHI: which users accessed it?
    - What user authentication failures were reported?
    - What node authentication failures were reported?

VI. THE MAIN TECHNICAL ISSUES TO BE RESOLVED AT THE EUROPEAN LEVEL TO ACHIEVE EHR INTEROPERABILITY

It is clear from the discussion that in order to resolve interoperability at the EU level, the issues need to be addressed include:

- Providing the interoperability of the various different messaging infrastructures being used
- Providing the interoperability of various EHR standards being used
- Providing the interoperability of various patient identification mechanisms
- Providing security, privacy and authentication in accessing clinical information.

RIDE (http://www.srdc.metu.edu.tr/webpage/projects/ride/) Project is addressing these issues to propose possible alternatives. It is a roadmap project for interoperability of eHealth systems leading to recommendations for actions and to preparatory actions at the European level. This roadmap will prepare the ground for future actions as envisioned in the action plan of the eHealth Communication COM 356 by coordinating various efforts on eHealth interoperability in member states and the associated states.

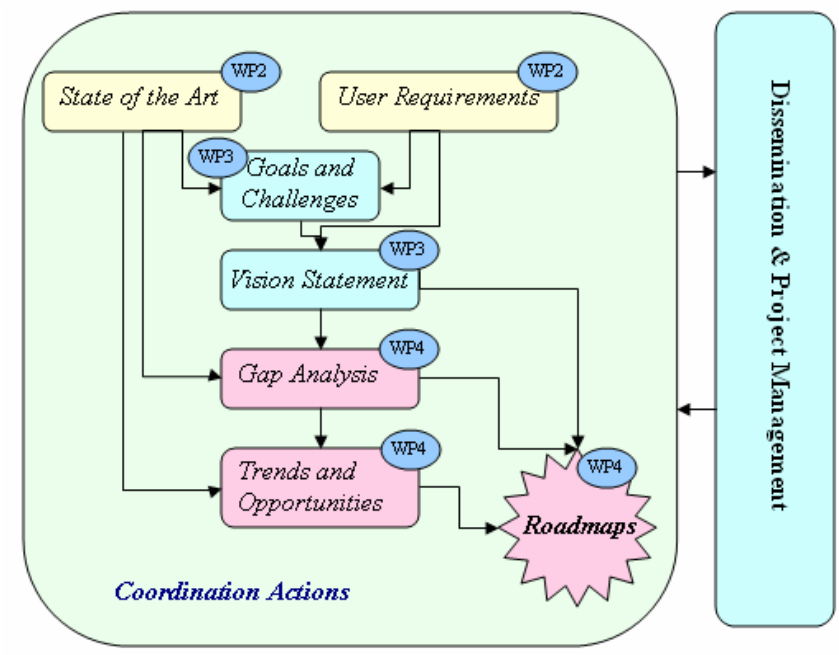

Figure 2. Phases of the RIDE Roadmapping Process

The phases of the RIDE Roadmapping process are demonstrated in Figure 2. First, surveys on the state-of-the-art are performed which covered related standard activities. The outcome of this work is available from the following links:

- RIDE – D.2.2.1 Standardization Efforts – A short Survey on IHE Patient Care Coordination Framework, http://www.srdc.metu.edu.tr/webpage/projects/ride/deliverables/D2.2.1StandardizationIHE-XDS-MS.pdf
- RIDE – D.2.2.1 Standardization efforts for providing semantic interoperability in the Health domain – A Survey and Analysis of Electronic Healthcare Record Standards http://www.srdc.metu.edu.tr/webpage/projects/ride/deliverables/RIDE-D2.2.1-ComputingSurveysPaper.pdf
- RIDE – D.2.2.1 Standardization efforts for providing semantic interoperability in the eHealth domain http://www.srdc.metu.edu.tr/webpage/projects/ride/deliverables/RIDE-D2.2.1-standards-09.doc

In parallel to this, the current state of eHealth interoperability in the EU Member states as well as US and Canada are investigated. The outcome of this work is presented in the following links:

- RIDE – D.2.1.1 Current European Practices in eHealth domain: Survey of NHS Connecting for Health (England) http://www.srdc.metu.edu.tr/webpage/projects/ride/deliverables/RIDE-D2.1.1-CurrentPracticesNHS-England.doc
- RIDE – D.2.1.1 Current European Practices in eHealth domain: Survey of Canada Health Infoway http://www.srdc.metu.edu.tr/webpage/projects/ride/deliverables/RIDED.2.1.1%20-%20CurrentPracticesCanada.pdf
- RIDE – D.2.1.1 Current European Practices in eHealth domain A brief survey of the Initiative by the Dutch National ICT Institute for Healthcare (NICTIZ)

http://www.srdc.metu.edu.tr/webpage/projects/ride/deliverables/RIDED.2.1.1%20-%20CurrentPracticesDutch.pdf

- RIDE – D.2.1.1 Current European Practices in eHealth domain: Survey of CARELINK (Sweden) http://www.srdc.metu.edu.tr/webpage/projects/ride/deliverables/RIDED.2.1.1%20-%20CurrentPracticesSweden.pdf
- RIDE – D.2.1.1 European Current practices in providing semantic interoperability in eHealth domain: Survey of eHealth Practices (Czech Republic) http://www.srdc.metu.edu.tr/webpage/projects/ride/deliverables/RIDE-D2%201%201-CurrentPractices_CzechRepublic.doc
- RIDE – D. 2.1.1 Current European practices in providing interoperability in eHealth domain: Survey of Cyprus Health Care System http://www.srdc.metu.edu.tr/webpage/projects/ride/deliverables/RIDED.2.1.1%20-%20CurrentPracticesCyprus.doc
- RIDE – D.2.1.1 Current European practices in providing interoperability in eHealth domain: Danish Healthcare System http://www.srdc.metu.edu.tr/webpage/projects/ride/deliverables/RIDED.2.1.1%20-%20CurrentPracticesDenmark.doc
- RIDE – D.2.1.1 Current European eHealth practices: A Brief Survey of the Digital Health Record Project conducted by the Ministry of Social Affairs of Estonia http://www.srdc.metu.edu.tr/webpage/projects/ride/deliverables/RIDED.2.1.1%20-%20CurrentPracticesEstonia.doc
- RIDE – D.2.1.1 Current European practices in eHealth: A Brief Survey of the Initiative by the German Federal Ministry of Health http://www.srdc.metu.edu.tr/webpage/projects/ride/deliverables/RIDED.2.1.1%20-%20CurrentPracticesGermany.doc
- RIDE – D.2.1.1 Current European practices in providing interoperability in eHealth domain: HEALTHCONNECT and NEHTA (Australia) http://www.srdc.metu.edu.tr/webpage/projects/ride/deliverables/RIDED.2.1.1%20-%20CurrentPracticesAustralia.doc
- RIDE – D.2.1.1 Current European practices in eHealth: A Brief Survey of the eHealth Initiatives of Austria http://www.srdc.metu.edu.tr/webpage/projects/ride/deliverables/RIDED.2.1.1%20-%20CurrentPracticesAustria.doc
- RIDE – D.2.1.1 Current European practices in providing interoperability in eHealth domain: KMEHR-BIS and BE-HEALTH (Belgium) http://www.srdc.metu.edu.tr/webpage/projects/ride/deliverables/RIDED_2_1_1%20-%20CurrentPracticesBelgium.doc
- RIDE – D.2.1.1 European Current practices in providing semantic interoperability in eHealth domain: Survey of eHealth Practices in Greece http://www.srdc.metu.edu.tr/webpage/projects/ride/deliverables/RIDE-D2%201%201-CurrentPractices_Greece.doc
- RIDE – D.2.1.1 Current European practices in providing interoperability in eHealth domain: HUNGARY http://www.srdc.metu.edu.tr/webpage/projects/ride/deliverables/RIDED.2.1.1%20-%20CurrentPracticesHungary.doc
- RIDE – D.2.1.1 Current European practices in providing interoperability in eHealth domain: Survey of eHealth initiatives in IRELAND http://www.srdc.metu.edu.tr/webpage/projects/ride/deliverables/RIDED.2.1.1%20-%20CurrentPracticesIreland-DERI.doc

- RIDE – D.2.1.1 Current European practices in providing interoperability in eHealth domain: LATVIA
  http://www.srdc.metu.edu.tr/webpage/projects/ride/deliverables/RIDED.2.1.1%20-%20CurrentPracticesLatvia.doc
- RIDE – D.2.1.1 Current European practices in providing interoperability in eHealth domain: Survey of HealthNet (Luxembourg)
  http://www.srdc.metu.edu.tr/webpage/projects/ride/deliverables/RIDED.2.1.1%20-%20CurrentPracticesLuxembourg.doc
- RIDE – D.2.1.1 Current European practices in providing interoperability in eHealth domain: Survey of Malta Health Care System
  http://www.srdc.metu.edu.tr/webpage/projects/ride/deliverables/RIDED.2.1.1%20-%20CurrentPracticesMalta.doc
- RIDE – D.2.1.1 European Best practices in providing semantic interoperability in eHealth domain: Survey of Norway Healthcare Services
  http://www.srdc.metu.edu.tr/webpage/projects/ride/deliverables/RIDED.2.1.1%20-%20CurrentPracticesNorway.doc
- RIDE – D.2.1.1 Current European practices: A Brief Survey of the use of ICT in the health sector in Poland
  http://www.srdc.metu.edu.tr/webpage/projects/ride/deliverables/RIDED.2.1.1%20-%20CurrentPracticesPoland.doc
- RIDE – D.2.1.1 Current European practices in providing interoperability in eHealth domain: Portugal
  http://www.srdc.metu.edu.tr/webpage/projects/ride/deliverables/RIDED.2.1.1%20-%20CurrentPracticesPortugal.doc
- RIDE – D.2.1.1 Current European practices in providing interoperability in eHealth domain: SLOVENIA
  http://www.srdc.metu.edu.tr/webpage/projects/ride/deliverables/RIDED%202%201%201%20-%20CurrentPracticesSlovenia.doc
- RIDE – D.2.1.1 Current European practices in providing interoperability in eHealth domain: SPAIN
  http://www.srdc.metu.edu.tr/webpage/projects/ride/deliverables/RIDED%202%201%201%20-%20CurrentPracticesSPAIN.doc
- RIDE – D.2.1.1 Current International Practices in providing interoperability in eHealth domain: A Survey of US eHealth Initiatives
  http://www.srdc.metu.edu.tr/webpage/projects/ride/deliverables/RIDED%202%201%201%20-%20CurrentPracticesUS.doc
- RIDE – D.2.1.1 European Current practices in providing semantic interoperability in eHealth domain: Survey of eHealth Practices (France)
  http://www.srdc.metu.edu.tr/webpage/projects/ride/deliverables/RIDE-D2%201%201-CurrentPractices_France.doc
- RIDE – D.2.1.1 European Best practices in providing semantic interoperability in eHealth domain
  http://www.srdc.metu.edu.tr/webpage/projects/ride/deliverables/RIDE_D2.1.1_v2.0.doc

Then the interoperability requirements of applications in the eHealth domain are investigated which is available in the following link:

- RIDE – D.3.1.1 Goals and Challenges
  http://www.srdc.metu.edu.tr/webpage/projects/ride/deliverables/RIDE-D.3.1.1-v08Interim.doc

The “State-of-the-Art” and the “Requirement Analysis” provided the input to determine the goals and challenges in this area which is available from the link:

- RIDE – D.2.3.1 Requirement Analysis for the RIDE Roadmap http://www.srdc.metu.edu.tr/webpage/projects/ride/deliverables/RIDE-D2.3.1-2006-09-28_final.pdf

In order to visualize the goals and to see how the current requirements can be addressed in the future, a set of visionary scenarios are developed which available at:

- RIDE – D.3.2.1 Vision for a Europe-wide Semantically Interoperable eHealth Infrastructure http://www.srdc.metu.edu.tr/webpage/projects/ride/deliverables/RIDE-D_3_2_1Vision-v1.4INTERIM.doc
- RIDE – D.3.2.2 Vision for a Europe-wide Semantically Interoperable eHealth Infrastructure http://www.srdc.metu.edu.tr/webpage/projects/ride/deliverables/RIDE-D3%202%202%20-%20Vision%20for%20a%20Europe-wide%20Semantically%20Interoperable%20eHealth%20Infrastructure%20II.doc

In Deliverable D.4.1.1 – Gaps Analysis I, the gaps that exist between the "state of the art" research ongoing in the eHealth domain (as-is situation) and the desired future description identified in the RIDE vision statement for achieving semantic interoperability in eHealth (to-be situation), are identified:

- RIDE – D.4.1.1 Gap Analysis http://www.srdc.metu.edu.tr/webpage/projects/ride/deliverables/RIDE-D.4.1.1.GapAnalysisV1_interim.doc

All this work will lead to the RIDE Roadmaps which will be available from RIDE Web page.

X. REFERENCES

[Artemis] The ARTEMIS Project. http://www.srdc.metu.edu.tr/webpage/projects/artemis

[Beale 2002] Beale T. 2002. Archetypes: Constraint-based Domain Models for Future-proof Information Systems. In OOPSLA 2002 workshop on behavioural semantics. http://www.deepthought.com.au/it/archetypes/archetypes_new.pdf.

[Bicer 2005a] Bicer V., Laleci G., Dogac A., and Kabak Y., "Artemis Message Exchange Framework: Semantic Interoperability of Exchanged Messages in the Healthcare Domain", ACM Sigmod Record 34, 3, September 2005.

[Bicer 2005b]Bicer V., Kilic O., Dogac A., Laleci G., "Archetype-based Semantic Interoperability of Web Service Messages in the Healthcare Domain", Int'l Journal on Semantic Web & Information Systems, Vol. 1, No.4, October 2005, pp. 1-22.

[CEN12265] Medical Informatics - Electronic Healthcare Record Architecture. European Prestandard ENV 12265, European Committee for Standardization, Brussels, Belgium.

[CEN13606.2000] Medical Informatics - Electronic healthcare record communication. European Prestandard ENV 13606, European Committee for Standardization, Brussels, Belgium.

[CEN/ISSS] Report from the CEN/ISSS eHealth Standardization Focus Group: Current and future standardization issues in the e-Health domain: Achieving interoperability, Final version, March 2005.

[Ceusters 2006] Ceusters, W., RIDE Deliverable 2.1.1 – Current Practices in Providing Semantic Interoperability in eHealth Domain: State-of-the-Art in Ontology with Special Emphasis on Biomedical Ontology.

[DICOM] Digital Imaging and Communications in Medicine. NEMA Standards Publication PS 3, National Electrical Manufacturers Association, Rosslyn VA, USA.

[Dogac 2006] Dogac A., Laleci G., Kirbas S., Kabak Y., Sinir S., Yildiz A., Gurcan, Y., "Artemis: Deploying Semantically Enriched Web Services in the Healthcare Domain", Information Systems Journal (Elsevier), Volume 31, Issues 4-5, June-July 2006, pp.321-339

[ebMS] ebXML Messaging Service, http://www.oasis-open.org/committees/documents.php?wg_abbrev=ebxml-msg

[ebXMLRR] Electronic Business XML (ebXML) Registry/Repository, http://www.oasis-open.org/committees/tc_home.php?wg_abbrev=regrep

[EHRcom 2004] prEN 13606-1, "Health informatics - Electronic health record communication - Part 1: Reference model", Draft for CEN Enquiry, CEN/TC 251 Health Informatics, European Committee for Standardization, Brussels, Belgium.

[Eichelberg 2005] Eichelberg M., Aden T., Riesmeier J., Dogac A., Laleci G., "A Survey and Analysis of Electronic Healthcare Record Standards", ACM Computing Surveys, Vol. 37, No:4, December 2005.

[Gruber 1993] Gruber T., “A translation approach to portable ontology specifications”. Knowledge Acquisition 5:199-220; 1993 [HL7] Health Level 7 (HL7), http://www.hl7.org/
[HL7CDA] CDA, HL7 Clinical Document Architecture - Release 2.0, http://xml.coverpages.org/CDA-20040830v3.pdf
[HL7RIM] HL7 Reference Information Model, http://www.hl7.org/library/data-model/RIM/modelpage_mem.htm
[HL7v2.5] HL7, “Application Protocol for Electronic Data Exchange in Healthcare Environments”, Version 2.5, ANSI Standard, Ann Arbor MI, USA (2000).
[HL7V3] HL7 v3 Message Development Framework, http://www.hl7.org/library/mdf99/mdf99.pdf.
[Iakovidis 1998] Towards Personal Health Record: Current situation, obstacles and trends in implementation of Electronic Healthcare Records in Europe," Intern. J. of Medical Informatics, vol 52, No 123, pg. 105 –117 (1998).
[IHE] Integrating Healthcare Enterprise, http://www.ihe.net/
[IHE TF] IHE IT Infrastructure Integration Profiles, http://www.ihe.net/Technical_Framework/index.cfm#IT
[LOINC]. Logical Observation Identifiers Names and Codes (LOINC). http://www.loinc.org/.
[OpenEHR] openEHR Community, http://www.openehr.org/
[OpenEHR03] Beale, T. and Heard, S. 2003. The openEHR EHR Service Model, Revision 0.2. openEHR Reference Model, the openEHR foundation.
[OpenEHR05] Beale, T., Heard, S., Kalra, D., and Lloyd, D. 2005f. The openEHR Data Structures Information Model, Revision 1.6rc1 (Release 1.0 draft). openEHR Reference Model, the openEHR foundation.
[OWL] Web Ontology Language (OWL), http://www.w3.org/TR/owl-features/
[RIDE] A Roadmap for Interoperability of eHealth Systems in Support of COM 356 with Special Emphasis on Semantic Interoperability, http://www.srdc.metu.edu.tr/webpage/projects/ride
[SOAP] Simple Object Access Protocol (SOAP), http://www.w3.org/TR/soap/
[SNOMED CT] SNOMED (The Systematized Nomenclature of Medicine) Clinical Terms, http://www.snomed.org/snomedct txt.html
[WSDL]Web Service Description Language (WSDL), http://www.w3.org/TR/wsdl